REMOVAL

1. **REMOVE DECK BOARD SUB-ASSEMBLY (See page IR-6)**
2. **REMOVE REAR DECK FLOOR BOX (See page IR-6)**
3. **REMOVE LUGGAGE COMPARTMENT TRAY (See page IR-6)**
4. **REMOVE BACK DOOR WEATHERSTRIP**
5. **REMOVE REAR DECK TRIM COVER (See page IR-7)**
6. **REMOVE TONNEAU COVER ASSEMBLY**
7. **REMOVE REAR SEAT CUSHION ASSEMBLY AND REAR SEATBACK ASSEMBLY (See page SE-18)**
8. **REMOVE REAR SEAT SIDE GARNISH RH (See page IR-7)**
9. **REMOVE DECK TRIM SIDE PANEL ASSEMBLY RH**
   (a) Remove the 4 bolts and 4 rope hooks.
   (b) Using a screwdriver, remove the deck trim side panel assembly RH.
   HINT:
   Tape the screwdriver tip before use.

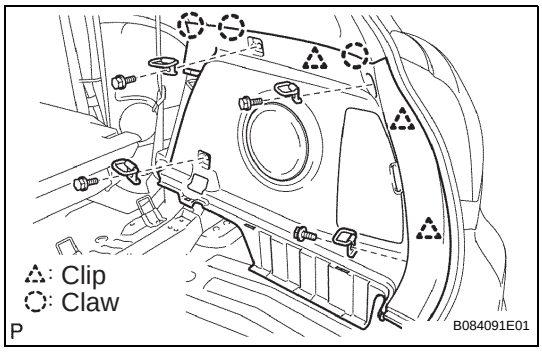

10. **REMOVE NO. 1 SPEAKER WITH BOX**
    (a) Disconnect the connector.
    (b) Remove the 5 bolts and No. 1speaker with box.

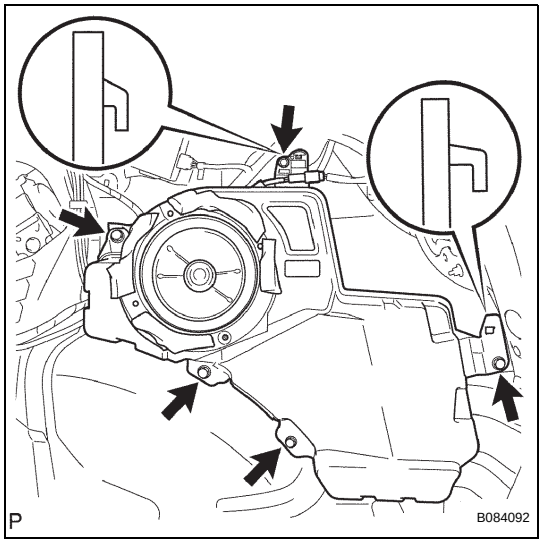

cardiagn.com

INSTALLATION

1. **INSTALL NO. 1 SPEAKER WITH BOX**
2. **INSTALL DECK TRIM SIDE PANEL ASSEMBLY RH**
3. **INSTALL REAR SEAT SIDE GARNISH RH**
4. **INSTALL REAR SEAT CUSHION ASSEMBLY AND REAR SEATBACK ASSEMBLY**
5. **INSTALL TONNEAU COVER ASSEMBLY**
6. **INSTALL REAR DECK TRIM COVER (See page IR-12)**
7. **INSTALL BACK DOOR WEATHERSTRIP**
8. **INSTALL LUGGAGE COMPARTMENT TRAY (See page IR-12)**
9. **INSTALL REAR DECK FLOOR BOX (See page IR-13)**
10. **INSTALL DECK BOARD SUB-ASSEMBLY (See page IR-13)**

cardiagn.com